NOTRE DAME UNIVERSITY
BANGLADESH

Project-01 (Group 08)

Course Title : Digital System Design Lab

Course Code: CSE-4106

Submitted by:

Raisha Anjum (0692230005101019)

Ruhi Tahmidul Al Rashedi (0692230005101020)

Batch: CSE 20

Date: 9/11/25

Submitted To:

Afsana Sharmin Shanta
Lecturer
Dept. of CSE
NDUB

Problem :

Design a 4-bit Arithmetic Logic Unit (ALU), which generates the following operations. Also show four status registers (Sign flag, Carry flag, Overflow flag, Zero flag).

Operation	Function
F=B–A–1	**Subtract with borrow**
F=B–A	**Subtraction**
F=B–1	**Decrement B**
F = B	**Transfer B**
F=A XOR B	**Exclusive-OR**
F=B'	**Complement B**

State Table:

S2	S1	S0	Cin	X	Y	Function
0	0	0	0	A’	B	Sub with borrow
0	0	0	1	A’	B	Subtraction
0	0	1	0	All 1	B	Decrement B
0	1	0	0	0	B	Transfer B
1	0	0	0(don’t care)	A	B	Exclusive OR
1	0	1	0(don’t care)	All 1	B	Complement B)

Equations:

X=S2’S1’S0’A’+S1’S0+S2S1’S0’A

= S1’S0’(S2’A’+S2A) +S1’S0

=S1'S0'(S2 XNOR A)+S1'S0

Y=B

Z=S2'Cin
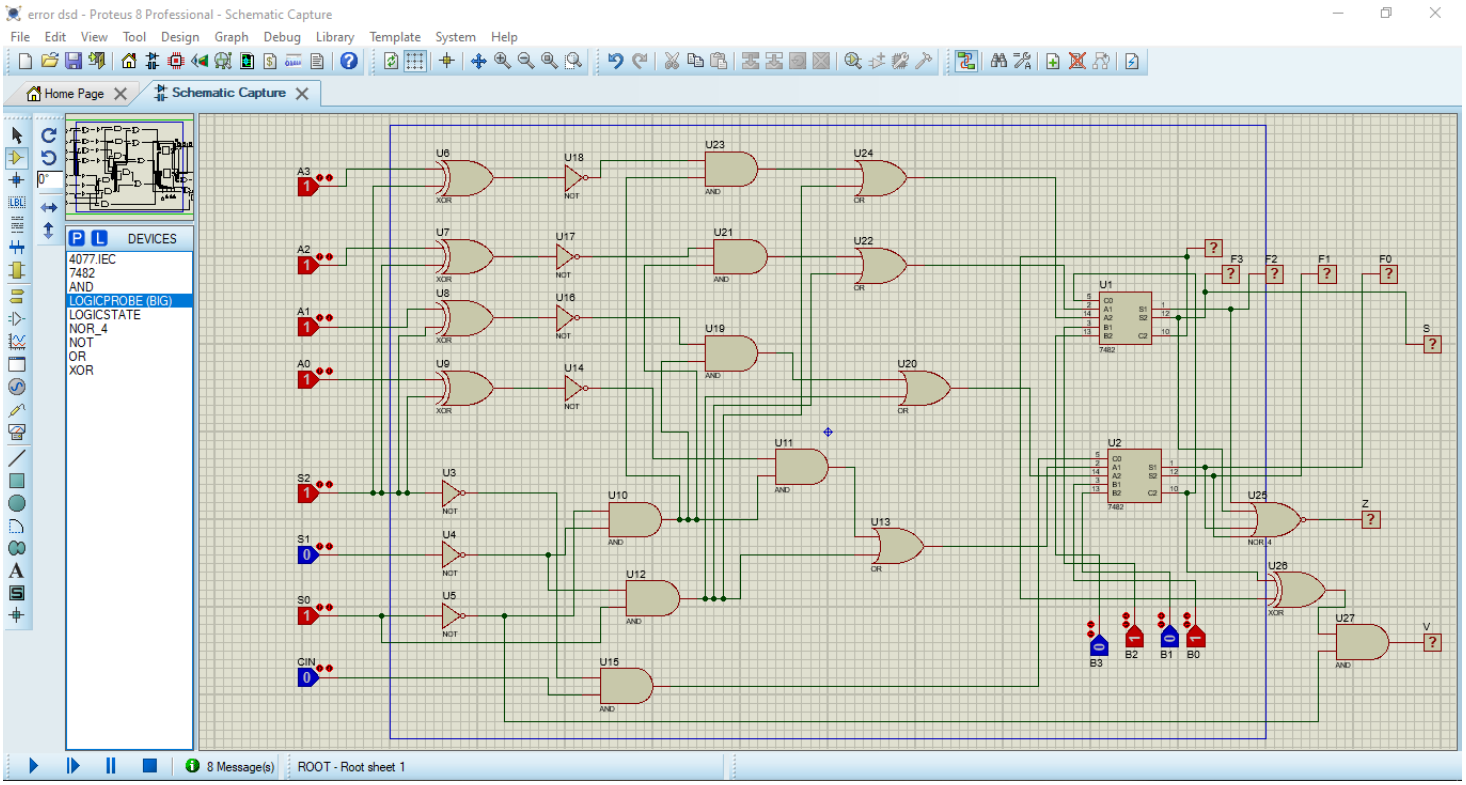
Circuit Design: